$\oint \bar{v} \cdot d\bar{a}$

$\left(y^2 \hat{i} + (2xy + z^2) \hat{j} + 2yz \hat{k} \right) \cdot (dy\,dz)\,\hat{i}$

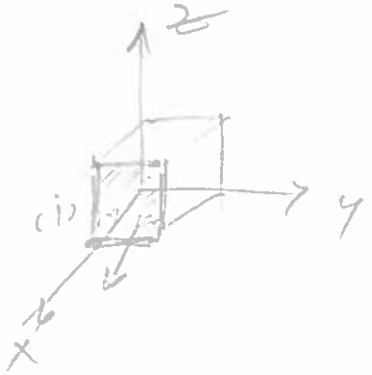

$$\int \bar{v} \cdot da = \int_0^1 \int_0^1 y^2 \, dy \, dz = \frac{y^3}{3} \times z = \frac{1}{3}$$